GROHE

ENJOY WATER®

27 905
(27 906)

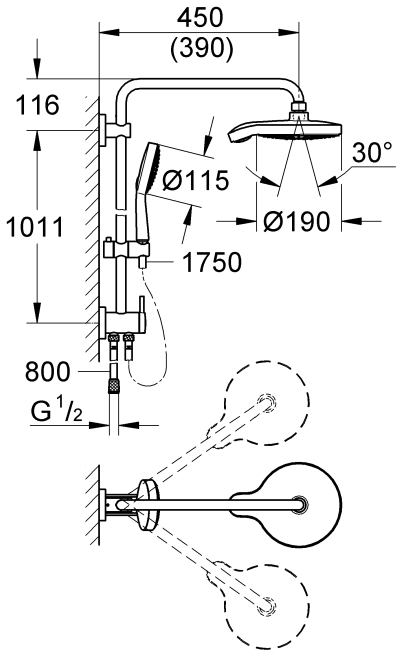

27 911
(27 912)

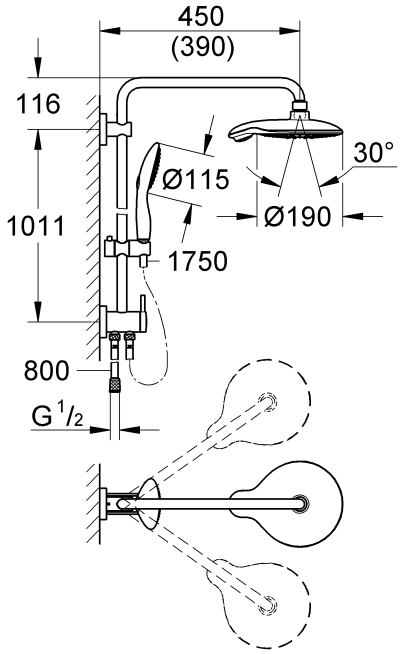

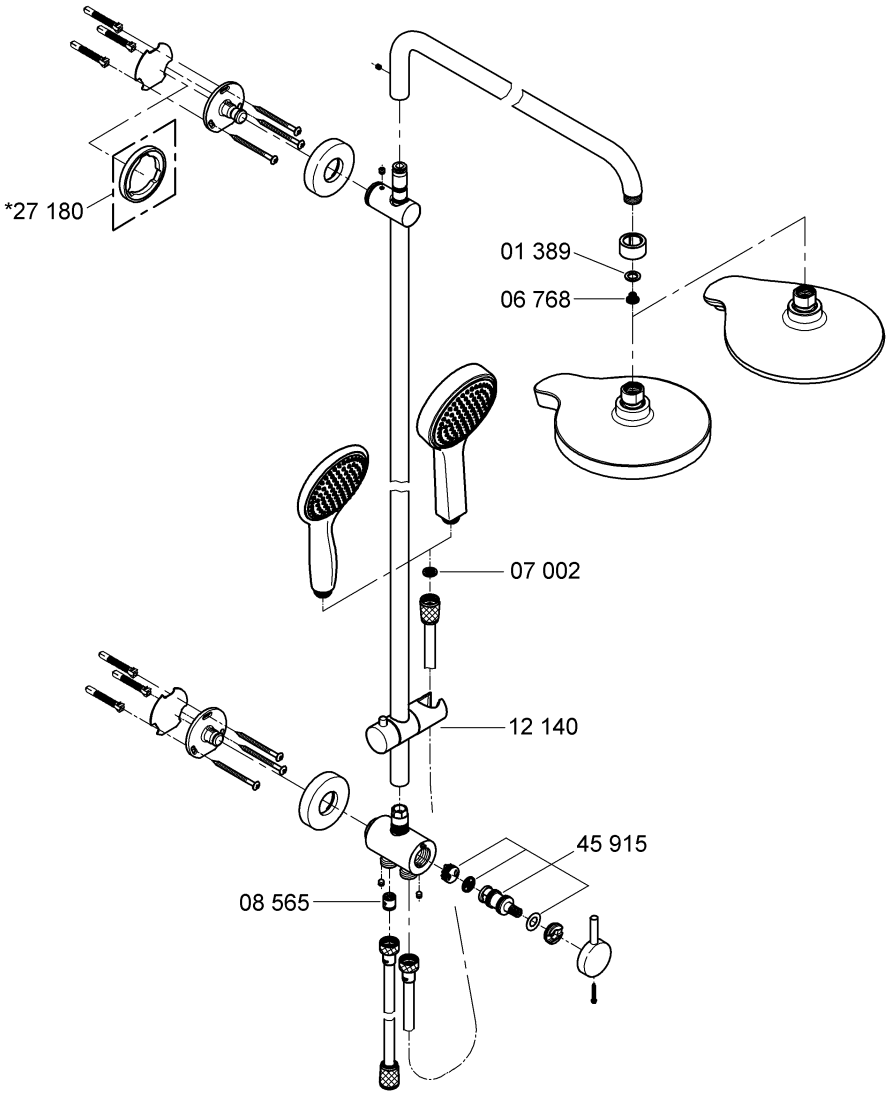

99.890.031/ÄM 227997/03.13

Design + Engineering GROHE Germany

GROHE

ENJOY WATER®

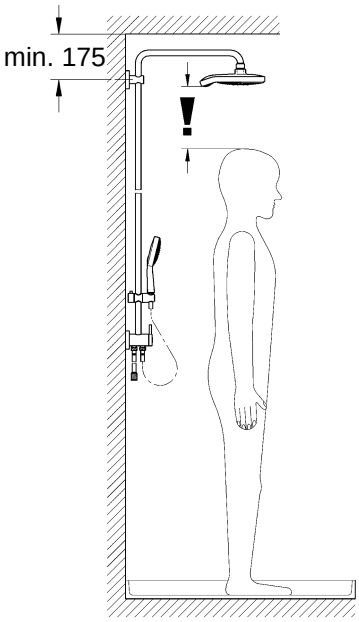

1.

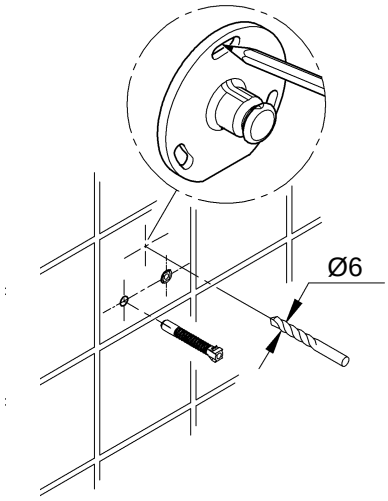

2.

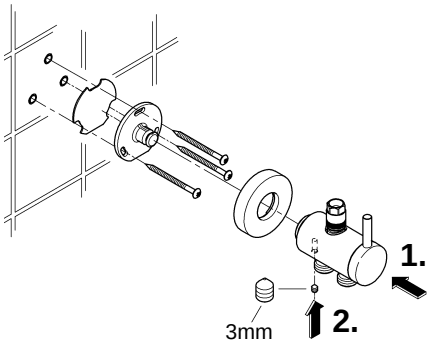

3.

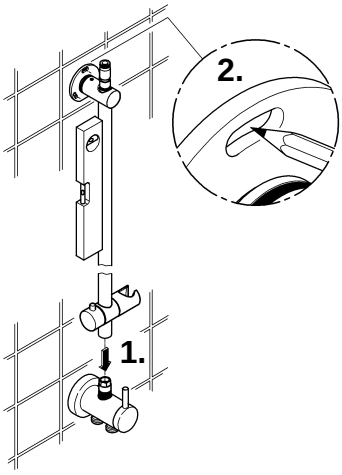

4a.

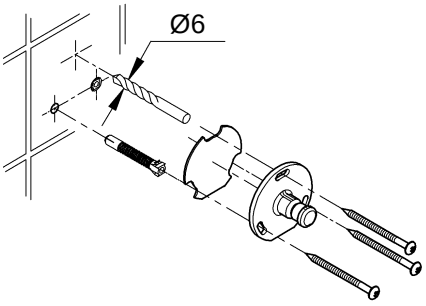

4b.

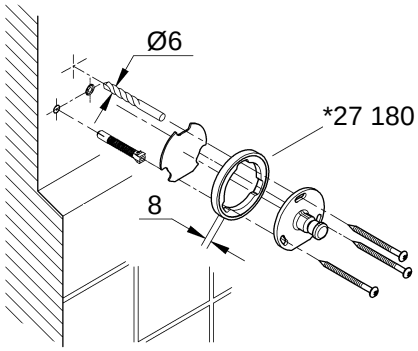

5.

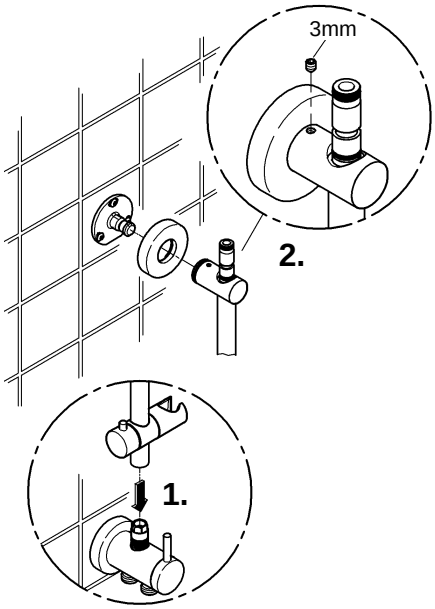

6.

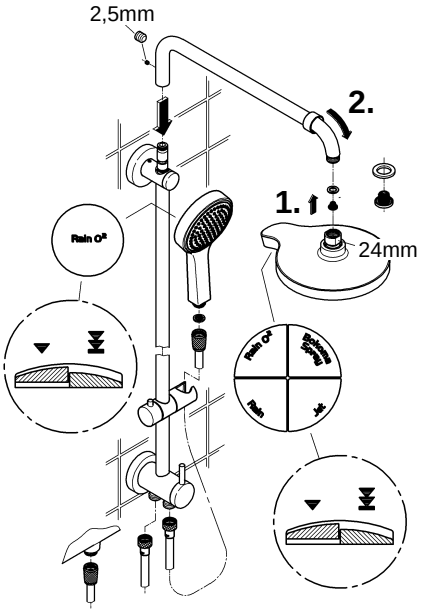

7.

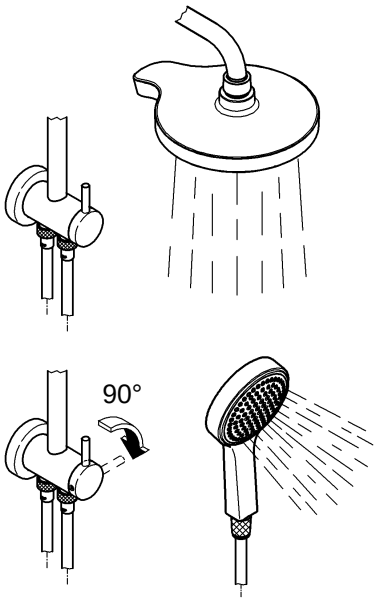

Design + Engineering GROHE Germany